AWESOMATIX A800RR — SETUP SHEET

NAME	Monti	DATE	6/1/25
COUNTRY		TEMP. °C AIR / TRACK	/
RACE	Dave V production race	TRACK SURFACE	ASPHALT ☑ CARPET ☐
TRACK	Valkaria	TRACK LAYOUT	TECHNICAL ☐ MIXED ☑ FAST ☐
		TRACTION	LOW ☑ MEDIUM ☐ HIGH ☐

FRONT

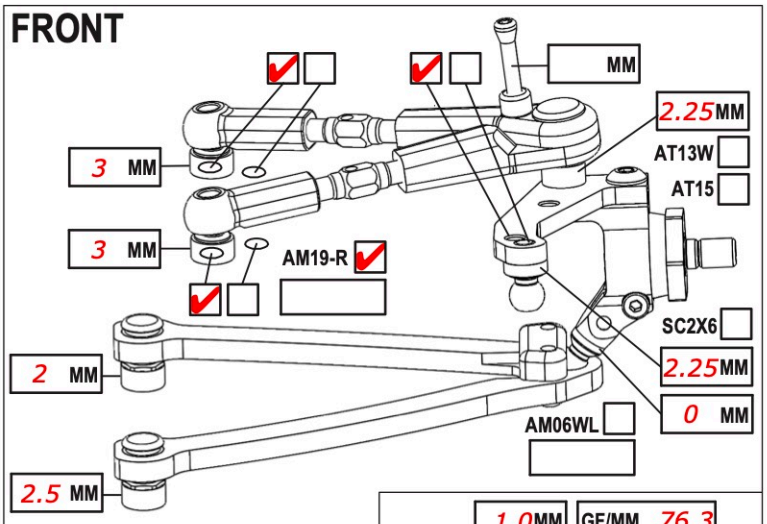

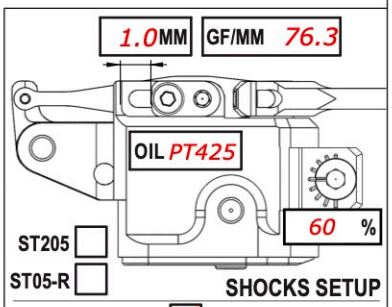

CAMBER ANGLE / °	1.5
CASTER ANGLE / °	4
TOE ANGLE / °	1 out
RIDE HEIGHT / MM	5
DOWNSTOP / MM	23.2
ANTI-ROLL BAR Ø / MM	1.2
ARB STIFFENER 1/4 ☐ 1/2 ☐ 3/4 ☐ 1 ☐	
LOWER ARM EXTENSION / MM	0
STEER. ARM AM14LS	☑
2ND SPRING SPR-P2 ☐ P1 ☐	
WHEEL SPACER / MM	0
DRIVE SPOOL ☑ DIFF ☐	
DRIVE POSITION DOWN ☐ UP ☑ +1 ☐	
DIFF OIL	DIFF SHIMS

SHOCKS SETUP

DAMPER	D4 ☑		
ROTOR	2 HOLES ☑		
SPRING	STD ☑	S ☐	
SRS/RHS ARR.	I ☑	II ☐	
PSS SETUP	30% ☐	25% ☑	15% ☐
DAMPING LINEAR	☑	P1 ☐	P2 ☐
DAMPER SPACER / MM	1mm		
C45	YES ☐	NO ☑	

REAR

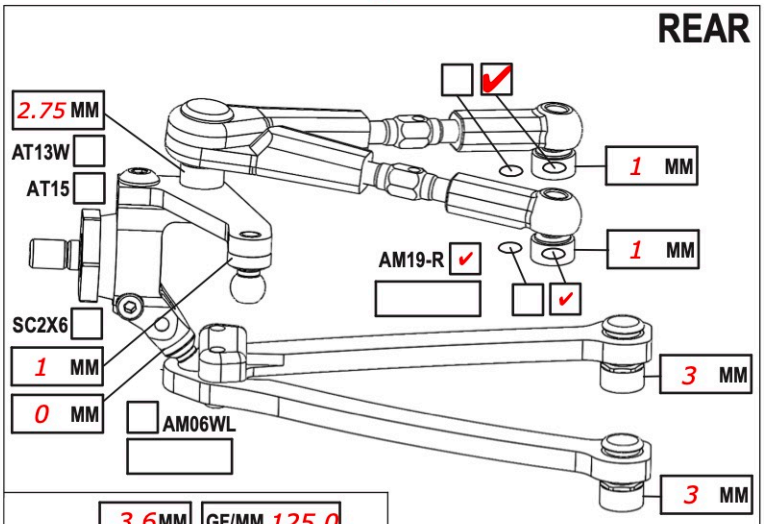

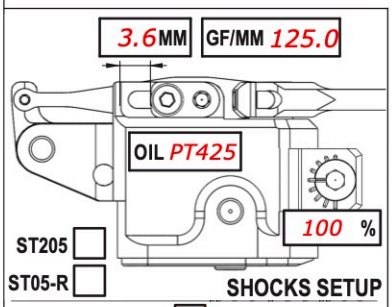

CAMBER ANGLE / °	2
CASTER ANGLE / °	-4
TOE ANGLE / °	3.25
RIDE HEIGHT / MM	5
DOWNSTOP / MM	24
ANTI-ROLL BAR Ø / MM	1.2
ARB STIFFENER 1/4 ☐ 1/2 ☐ 3/4 ☐ 1 ☐	
LOWER ARM EXTENSION / MM	0
STEER. ARM AM23-1	☑
2ND SPRING SPR-P2 ☐ P1 ☐	
WHEEL SPACER / MM	0
DRIVE DIFF	☑
DRIVE POSITION DOWN ☑ UP ☐ +1 ☐	
DIFF OIL 6	DIFF SHIMS small

SHOCKS SETUP

DAMPER	D4 ☑		
ROTOR	2 HOLES ☑		
SPRING	STD ☑	S ☐	
SRS/RHS ARR.	I ☑	II ☐	
PSS SETUP	30% ☐	25% ☐	15% ☐
DAMPING LINEAR	☑	P1 ☐	P2 ☐
DAMPER SPACER / MM	1mm		
C45	YES ☐	NO ☑	

CHASSIS FLEX AND WEIGHT SETTINGS

☐ BW22-R ☐ ABH ☑ BW52-R

ABH ☐ BW22-R ☐ BW52-R ☑

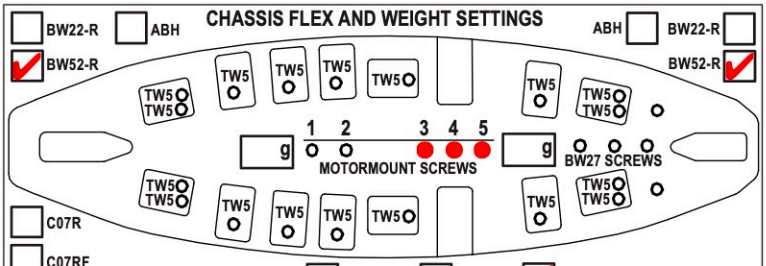

☐ C07R
☐ C07RF

LOWER DECK C01B-RAF ☐ C01B-RC ☐ C01RS ☑ OTHER _____

☑ BUMPER TOP PLATE CUT FRONT BUMPER P15L ☐ OTHER _____

☐ C26 ☐ C26

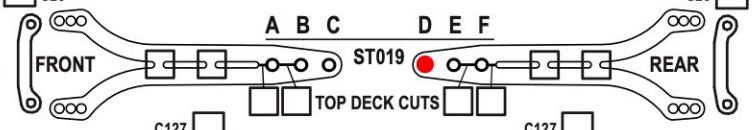

TOP DECK CUTS ☐ ☐

FRONT TOP DECK C127 ☐ C127S ☐ OTHER _____

REAR TOP DECK C127 ☐ C127S ☐ OTHER _____

SINGLE TOP DECK C27MMX ☑ OTHER G10 BELT TENSIONER AM279 ☐ OTHER _____

TIRES	Sweep D36		
INSERTS			
SIDE WALLS GLUE Ø / MM	F	R	
ADDITIVE	MGY	TIME MIN. F	10 R 10
TOTAL WEIGHT	1327	WEIGHT DISTRIBUTION % F	50.4 R 49.6

NOTES:

MOTOR LATERAL SHIFT / MM		SERVO	
MOTOR	HW 4.5	SERVOHORN / HEIGHT	18mm
SPUR 114 PINION 29 RATIO 7.47		STEER TRAVEL IN	OUT
BODY	Special	BATTERY	EAM 4200
WING	rad speed HD	RECEIVER	
ESC	HW	RADIO	
ESC SETTING			
BEST LAPTIME	12.7	QUALIF./FINAL POSITION	5 / 5

BODY POSITION

BOTTOM WINDOW LINE TO BODY POST DISTANCE _____ MM

FRONT BODY POST

ORING YES ☑ NO ☐

HOLE # 3

WINGLET YES ☑ NO ☐

REAR HRB SETTING / MM _____

SURFACE TO WING MOUNT DISTANCE / MM _____

COMMENTS: 28 g in front of sevo, 12g in front of motor, 7g front of battery, need to work on getting the front end out of the track, type 1 with 1 mm gap but rain came.