AWESOMATIX A800FXR — SETUP SHEET

NAME	Daniel Pöhlmann	DATE	15/16.11.2025
COUNTRY	Czech Republic	TEMP. °C AIR / TRACK	20°C /
RACE	2. Rebels Race & MČR finále		
TRACK	Team Rebels Prague		

TRACK SURFACE		ASPHALT ☐	CARPET ☐
TRACK LAYOUT	TECHNICAL ☐	MIXED ☑	FAST ☑
TRACTION	LOW ☐	MEDIUM ☑	HIGH ☐

FRONT

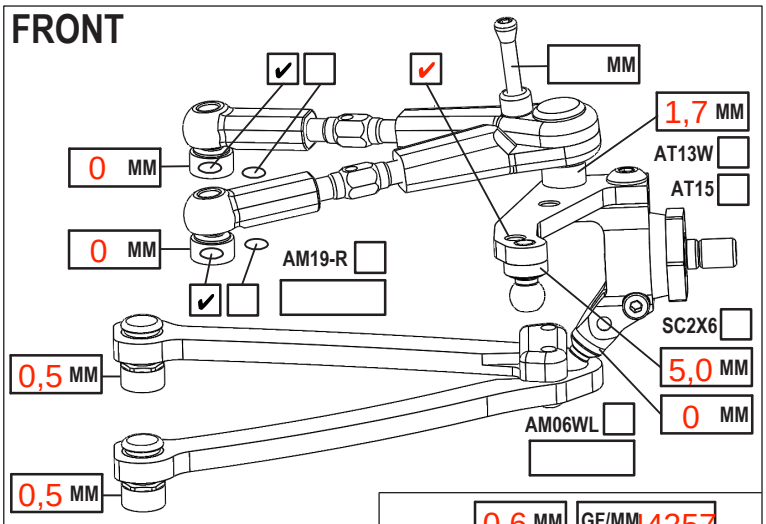

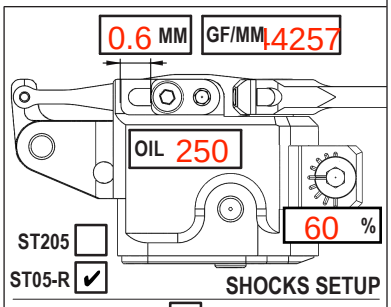

CAMBER ANGLE / °	-1,5
CASTER ANGLE / °	5,0
TOE ANGLE / °	+0,5
RIDE HEIGHT / MM	4,9
DOWNSTOP / MM	5,8
ANTI-ROLL BAR Ø / MM	1,1
ARB STIFFENER 1/4 ☐ 1/2 ☐ 3/4 ☐ 1 ☐	
LOWER ARM EXTENSION	0MM
STEER. ARM AM14FX	☑
WHEEL SPACER / MM	-
DRIVE SPOOL ☐	DIFF ☑
DRIVE POSITION UP ☑	DOWN ☐
DIFF OIL 200K	DIFF SHIMS

SHOCKS SETUP

DAMPER	D4 ☑		
ROTOR	2 HOLES ☑		
SPRING	STD ☐		S ☑
SRS/RHS ARR.	I ☑		II ☐
PSS SETUP	30% ☐	25% ☐	15% ☐
DAMPING	LINEAR ☐	P1 ☐	P2 ☑
DAMPER SPACER / MM	0mm		

REAR

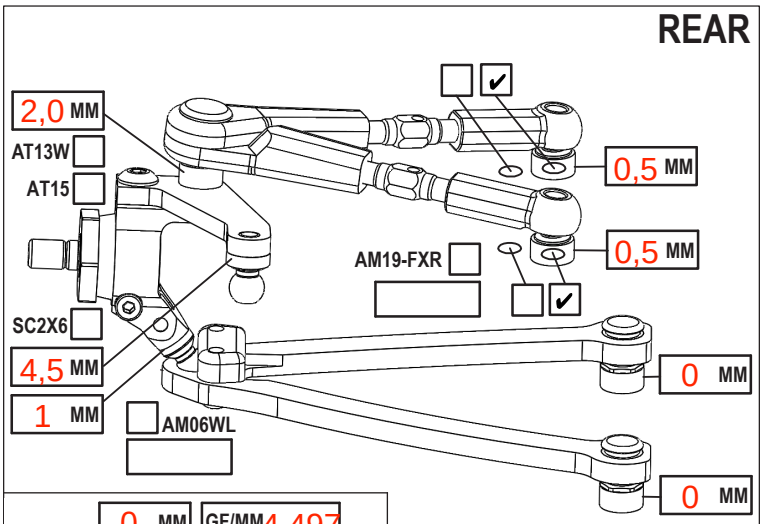

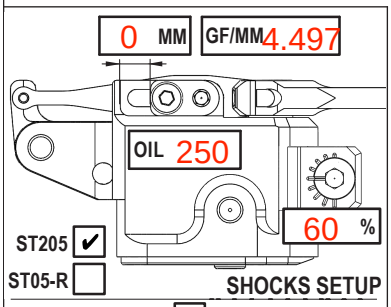

CAMBER ANGLE / °	-0,75
CASTER ANGLE / °	-4
TOE ANGLE / °	0,75
RIDE HEIGHT / MM	5,2
DOWNSTOP / MM	5,4
ANTI-ROLL BAR Ø / MM	1,1
ARB STIFFENER 1/4 ☐ 1/2 ☐ 3/4 ☐ 1 ☐	
LOWER ARM EXTENSION	0MM
STEER. ARM AM23-1	☑
WHEEL SPACER / MM	-
WHEEL BASE #1 ☐ #2 ☐ #3 ☑ #4 ☐	

SHOCKS SETUP

DAMPER	D4 ☑		
ROTOR	2 HOLES ☑		
SPRING	STD ☐		S ☑
SRS/RHS ARR.	I ☑		II ☐
PSS SETUP	30% ☐	25% ☐	15% ☐
DAMPING	LINEAR ☑	P1 ☐	P2 ☐
DAMPER SPACER / MM	0mm		
C45FXR	YES ☐		NO ☑

CHASSIS FLEX AND WEIGHT SETTINGS

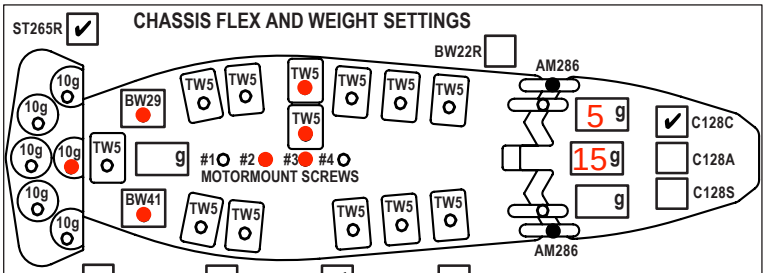

AM220FXR ☐ C01FXR-A ☐ C01FXR-C ☑ C01FXR-S ☐

☐ BUMPER TOP PLATE CUT — BUMPER TOP PLATE P14-5-R ☐ C07R ☑ C07RF ☐

☐ AM288 — FRONT BUMPER P15FX ☐ P15L ☐ 110% Agent

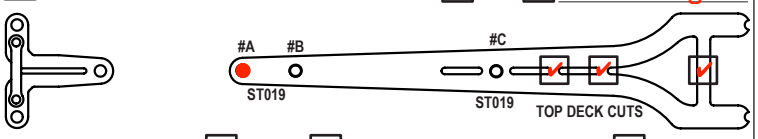

FRONT TOP DECK C107FXG ☐ C107FXC ☑ — REAR TOP DECK 27FXR ☑

SINGLE TOP DECK C27FXR-L ☐

TIRES	HUDY 803041 (RIDE)		
INSERTS	preglued		
SIDE WALLS GLUE Ø / MM	F	R	
ADDITIVE	Hudy RED	TIME MIN. F	10 R 10
TOTAL WEIGHT	1255	WEIGHT DISTRIBUTION % F	64 R 36

NOTES:

MOTOR LATERAL SHIFT / MM	0	SERVO	MKS HBL575SL
MOTOR	HW ETS 17.5T	SERVOHORN / HEIGHT	18mm
SPUR 100 PINION 38 RATIO	0	STEER TRAVEL IN 21.5 OUT	20.5
BODY	Montech CIVIC	BATTERY	GensAce 5000
WING	Std.	RECEIVER	Sanwa RX493i
ESC	Hobbywing G3	RADIO	Sanwa M17
ESC SETTING	0 Boost without Limiter		
BEST LAPTIME	17,8	QUALIF./FINAL POSITION	2 / 2

BODY POSITIONS

MIDDLE HOLE <--> BOTTOM WINDOW LINE — 39 MM

FRONT BODY POST

ORING YES ☐ NO ☐

HOLE #

WINGLET YES ☐ NO ☑

REAR HRB SETTING / MM

REAR BODYHEIGHT / MM

COMMENTS:

Setup for Hudy FWD Tyre! (old RIDE)
ZA Set used / AM14FX-LA Hole #1
P64 cut, 20g under Battery